Acer Gadget

ZUOOS SmartVision Ultra+ User Manual

1 Disassembly of left tempered glass side panel,front tempered glass panel and right side panel

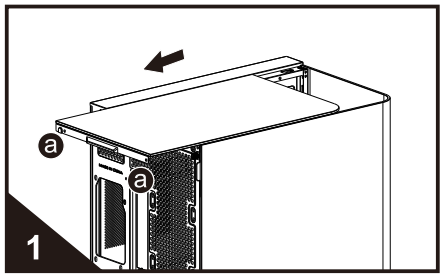

Unscrew the rear two lock glass side plate screws, push back in the direction of the arrow, then remove the glass top cover

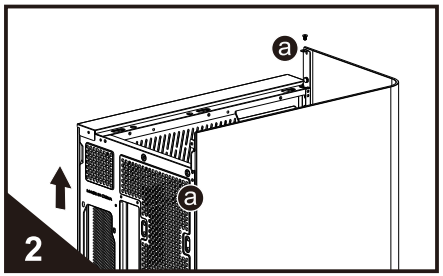

Unscrew the 2 screws which secured the top tempered glass at the rear end, push the top tempered glass backward to disassemble it

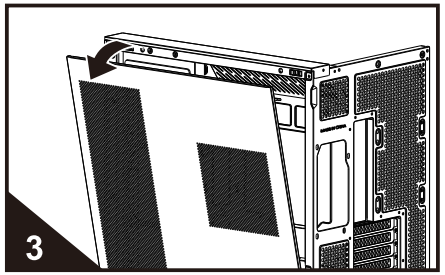

Break up the right side panel outward according to the arrow direction in the illustration to disassemble it

2 PSU installation

(Support ATX PSU)

Install PSU in the positions as shown in the illustration, then fix it by 4 screws at ⓐ positions

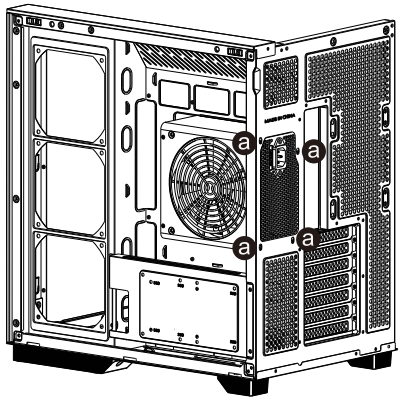

3 M/B installation

(★★★ Support M/B back plug)

Put M/B in the case and align the screw holes, then fix M/B by screws as shown in the following illustration.

(this case support ATX /micro ATX and ITX M/B).

(different M/B has different installation characteristics, please refer to the user manual of your M/B before installation.)

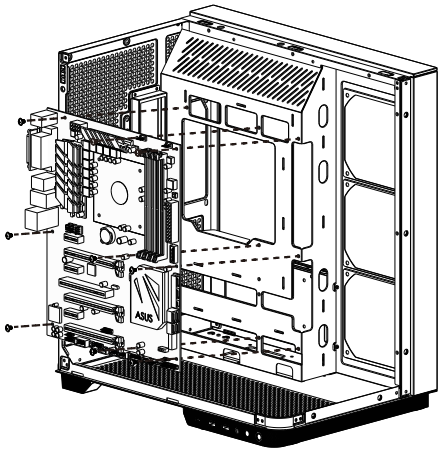

4 HDD/SSD installation (Support HDD*1+SSD*2 or HDD*1+SSD*3)

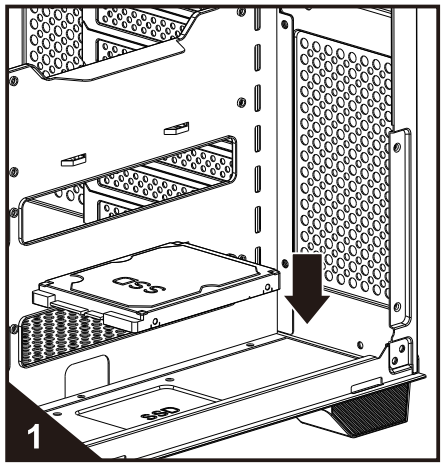

Put 2.5"SSD*1 on bottom panel secure it by screws from the bottom

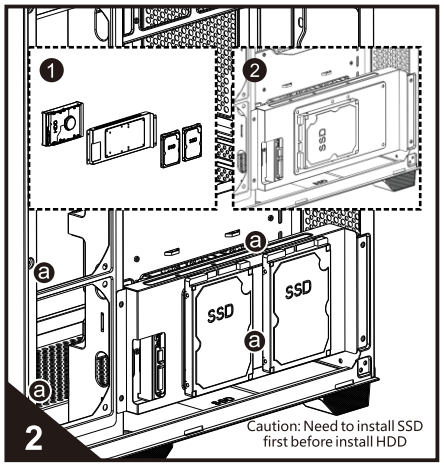

1.Firstly knock down the HDD/SSD bracket

2.Install 1*3.5"HDD +2*2.5"SSD (figure ❶) or 1*3.5"HDD+1*2.5"SSD (figure ❷)on the HDD/SSD bracket

3.Finally re-install the HDD/SSD bracket in the locking slots on the bottom panel, secure the bracket from the bottom at ⓐ positions by screws

5 VGA card installation

① VGA card standard(horizontal) installation

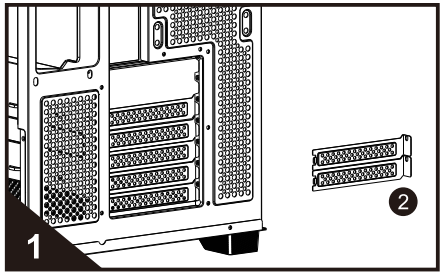

Unscrew the screws of the fastening bar of the PCI slot covers remove the fastening bar

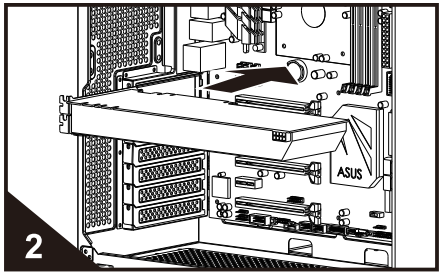

Insert VGA card into the slot of M/B according to the arrow direction; Fix VGA card by screws

② VGA card vertical installation (optional)

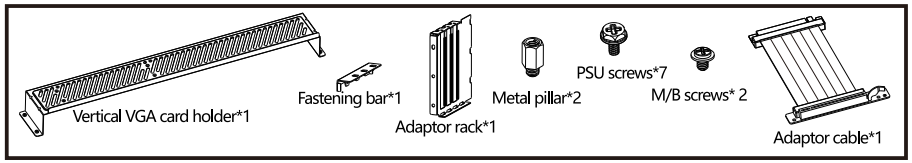

VGA card vertical installation kit is optional, need to buy separately

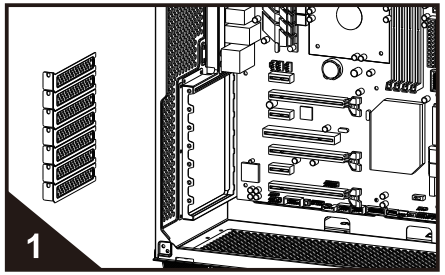

Remove all the PCI slot covers

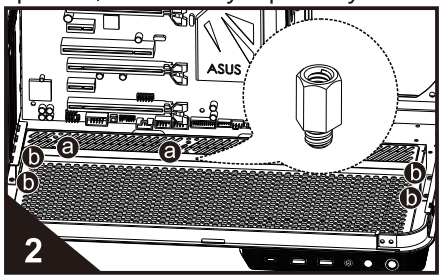

1.Install 2pcs metal pillars at ⓐ positions of the VAG card holder as shown in the illustration
2.Secure the VGA card holder on bottom panel at ⓑ positions by screws

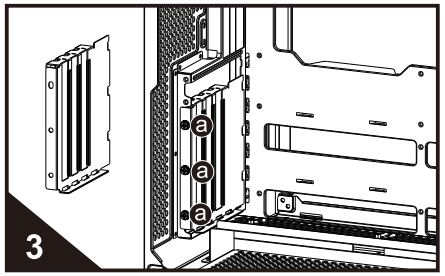

Install the adaptor rack in the position of the lower 6 PCI slots as shown in the illustration secure the adaptor rack at ⓐ positions by screws

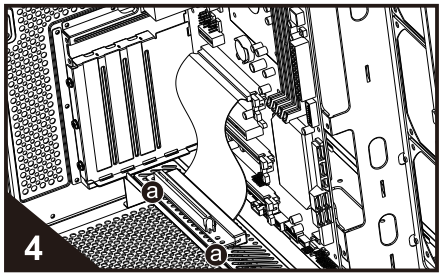

Insert one connector of the adaptor cable in the VGA card slot of M/B, and secure another connector of the adaptor cable on the VGA card holder at ⓐ positions by screws

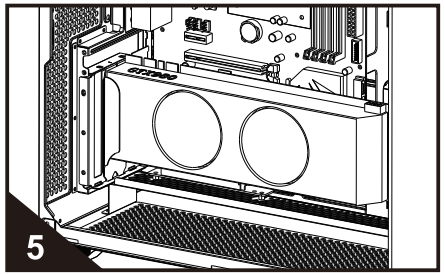

Insert VGA card in the slot of the connector of the adaptor cable which was secured on the VGA card holder

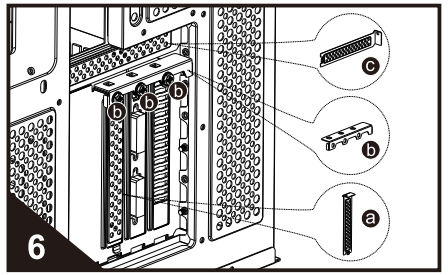

1.Cover the innermost slot of the adaptor rack by PCI slot cover after install VGA card (figure ⓐ)
2.Install the fastening bar on the top edge of the adaptor rack, as shown in the illustration align its 3 hooks with the 3 tiny slots on the top edge of the adaptor rack, secure the fastening bar at ⓑ positions by 3 screws (figure ⓑ)
3.Re-cover the PCI slot which is above the installed VGA card by a PCI slot cover (figure ⓒ) and secure it by screw

6 Illustration of LED strips installation(optional)

Note: (LED strips are optional. If the gaming case comes with LED strips, please install the LED strips according to the following illustration.

1. Tear off the release paper of the sticky tape on the back of "a" LED strip (385cm), stick it on the bent rim of top metal plate.
2. Tear off the release paper of the sticky tape on the back of "b" LED strip (385cm), stick it on the bent rim of top metal plate.

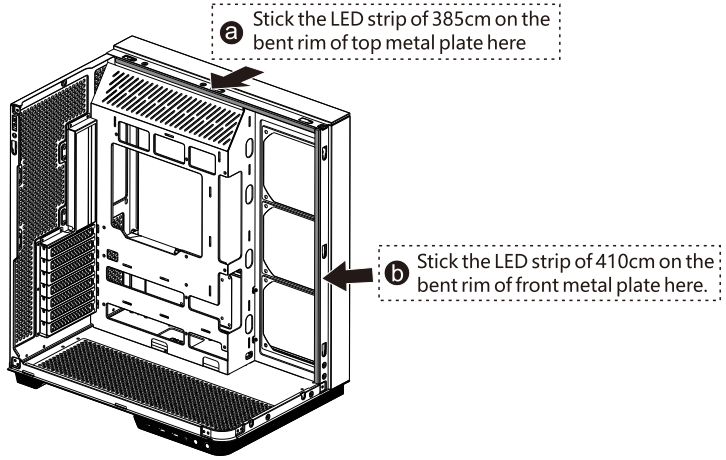

7 Cooling device compatibility

M/B bracket: 3 *12cm fan or 1*360mm water cooling kit
Bottom panel: 3*12cm fan or 1*240mm water cooling kit
Rear panel: 2*12cm fan